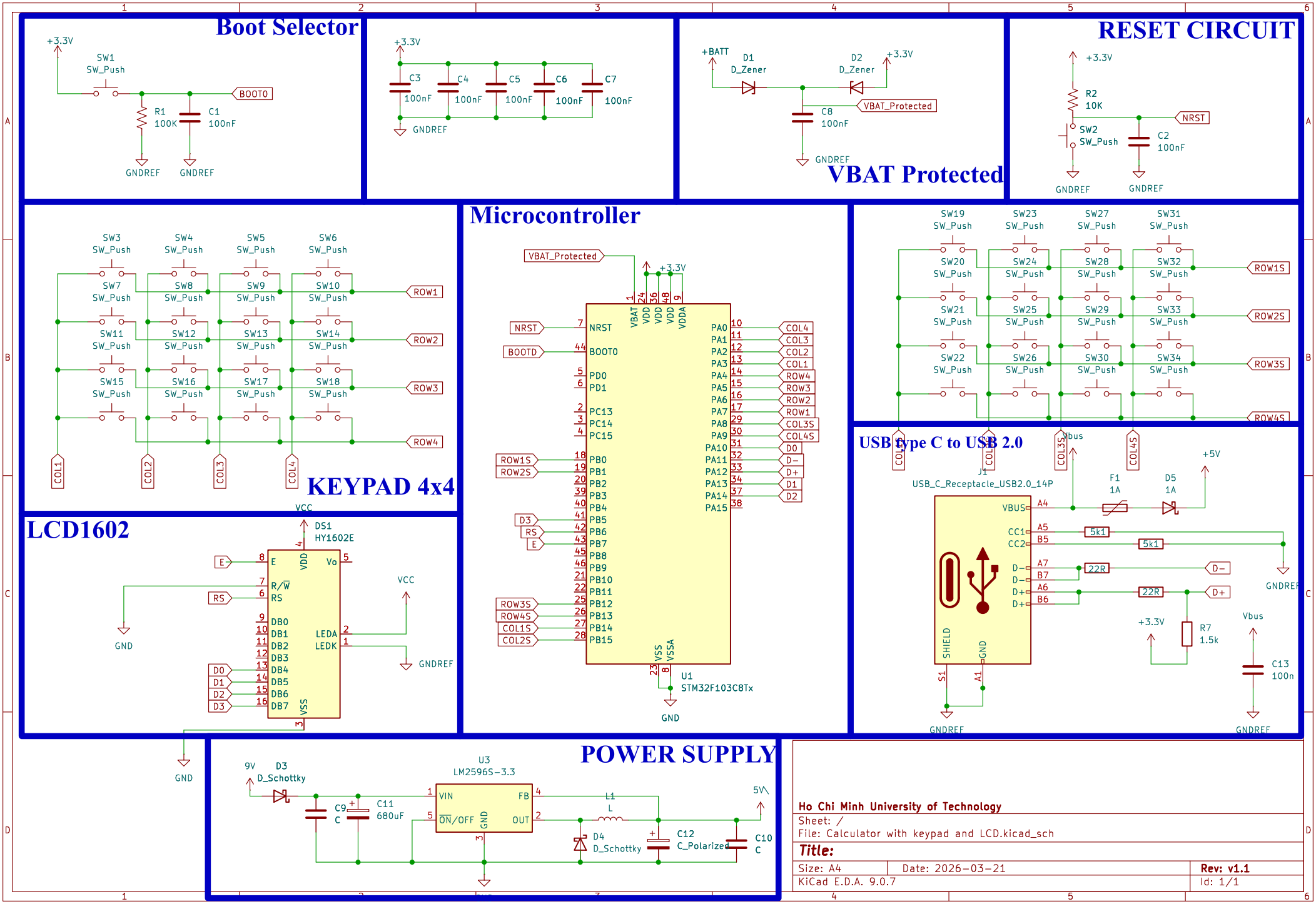
Boot Selector
+3.3V
SW1
SW_Push
BOOT0
R1
100K
C1
100nF
GNDREF
GNDREF
+3.3V
C3
100nF
C4
100nF
C5
100nF
C6
100nF
C7
100nF
GNDREF
+BATT
D1
D_Zener
D2
D_Zener
+3.3V
VBAT_Protected
C8
100nF
GNDREF
VBAT Protected
RESET CIRCUIT
+3.3V
R2
10K
NRST
SW2
SW_Push
C2
100nF
GNDREF
GNDREF
KEYPAD 4x4
SW3 SW4 SW5 SW6
SW7 SW8 SW9 SW10
SW11 SW12 SW13 SW14
SW15 SW16 SW17 SW18
ROW1
ROW2
ROW3
ROW4
COL1
COL2
COL3
COL4
Microcontroller
VBAT_Protected
+3.3V
NRST
BOOT0
PD0
PD1
PC13
PC14
PC15
PB0
PB1
PB2
PB3
PB4
PB5
PB6
PB7
PB8
PB9
PB10
PB11
PB12
PB13
PB14
PB15
VBAT
VDD
VDD
VDD
VDDA
PA0
PA1
PA2
PA3
PA4
PA5
PA6
PA7
PA8
PA9
PA10
PA11
PA12
PA13
PA14
PA15
ROW1S
ROW2S
D3
RS
E
ROW3S
ROW4S
COL1S
COL2S
COL4
COL3
COL2
COL1
ROW4
ROW3
ROW2
ROW1
COL3S
COL4S
D0
D−
D+
D1
D2
VSS
VSSA
U1
STM32F103C8Tx
GND
SW19 SW23 SW27 SW31
SW20 SW24 SW28 SW32
SW21 SW25 SW29 SW33
SW22 SW26 SW30 SW34
ROW1S
ROW2S
ROW3S
ROW4S
USB Type C to USB 2.0
COL1
COL2
COL3S
Vbus
COL4S
J1
USB_C_Receptacle_USB2.0_14P
F1
1A
D5
1A
+5V
VBUS
A4
CC1
A5
CC2
B5
5k1
5k1
D−
A7
B7
22R
D−
D+
A6
B6
22R
D+
D+
GNDREF
SHIELD
GND
S1
A1
+3.3V
R7
1.5k
Vbus
C13
100n
GNDREF
GNDREF
LCD1602
VCC
DS1
HY1602E
E
RS
GND
VDD
Vo
R/W
RS
DB0
DB1
DB2
DB3
DB4
DB5
DB6
DB7
LEDA
LEDK
VSS
VCC
GNDREF
D0
D1
D2
D3
GND
POWER SUPPLY
9V
D3
D_Schottky
C9
C
C11
680uF
U3
LM2596S−3.3
VIN
ON/OFF
GND
FB
OUT
L1
L
D4
D_Schottky
C12
C_Polarized
C10
C
5V
Ho Chi Minh University of Technology
Sheet: /
File: Calculator with keypad and LCD.kicad_sch
Title:
Size: A4
Date: 2026−03−21
Rev: v1.1
KiCad E.D.A. 9.0.7
Id: 1/1